Vacuum generators OVTL

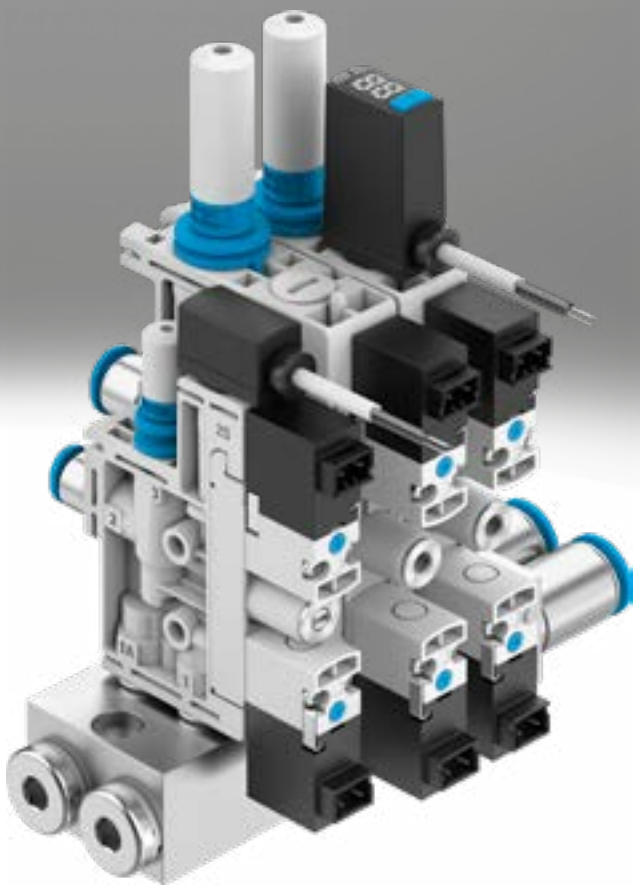

Key features

At a glance

Rapid reduction of vacuum for safe placement of the workpiece by a solenoid valve to control the ejector pulse, optional

Flow control screw to adjust the ejector impulse

Electrical connection via H3 plug

Fast vacuum build-up using a solenoid valve to control the compressed air supply

Supply port, secured with wire clamp

Additional supply port for separate supply of the ejector pulse, optional, secured with wire clamp

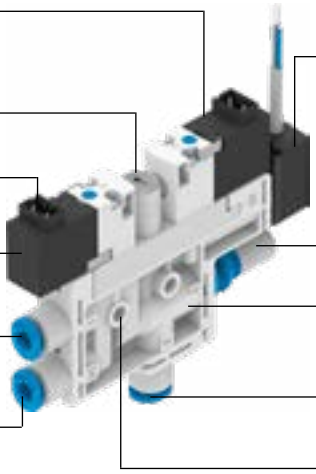

Pressure transmitter SPTE/pressure sensor SPAE for monitoring the vacuum, optional, secured with clamping clip

Maintenance-free operation and reduced noise level with an open silencer, optional

Vacuum generator cartridge, secured with clamping clip

Vacuum connection, secured with clamping clip

Housing with mounting holes

The compact vacuum generator

OVTL ➔ page 3

The vacuum generator OVTL is a configurable module comprising vacuum generator OVEL, the common supply manifold OABM-P and connection accessories.
All products are available from the factory fully assembled.

OVEL ➔ ovel

- Low-cost, compact vacuum generator
- Low weight
- Various performance levels and vacuum types
- Short switching times with integrated solenoid valves
  - Vacuum on/off
  - Ejector pulse
- Simple installation with H3 plugs and push-in fittings
- Straightforward mounting with retaining screws
- Low-noise operation due to integrated silencer
- Integrated filter
- Reduced contamination of the vacuum generator thanks to an open silencer
- Solenoid valves are switched by mechanical manual override
- Vacuum monitored by vacuum sensor
- Link up to 8 vacuum generators on a single common supply manifold.

Functional principle of OVEL

Vacuum ON/OFF

The compressed air supply is controlled by a solenoid valve. The solenoid valve can be supplied with the N/C (normally closed) switching function, i.e. the vacuum is not generated until the vacuum generator is pressurised with compressed air and the solenoid valve has been switched.

Optional ejector pulse

After the vacuum is switched off, an ejector pulse is activated and generated by a second solenoid valve to release the workpiece safely from the suction cup with connection and to purge the vacuum quickly.

The compressed air for the ejector pulse can be supplied either via the supply port or a separate port.

Peripherals overview

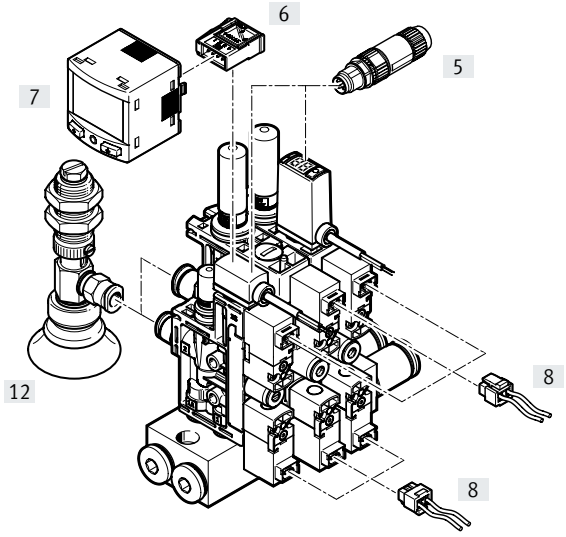

Mounting attachments and accessories		
		→ Page/Internet
[5]	Plug NECU-S-M8G3/M12G3	13
[6]	Plug NECU-S-ECG4	13
[7]	Signal converter SCDN	13
[8]	Plug socket with cable NEBV	13
[12]	Suction gripper ESG	esg
–	Suction cup complete holder ESH	esh
–	Suction cup with connection ESS	ess
–	Vacuum filter OAFF	12

Type codes

001	Series	
OVTL	Vacuum generator	

002	Size	
10	10 mm	
15	15 mm	

003	Compressed air supply connection	
Q6	Push-in connector 6 mm	
Q8	Push-in connector 8 mm	
G18	G1/8	

004	Compressed air supply connection position	
	Both sides	
L	Left	
R	Right	

005	Exhaust connection	
RQ	QS connections, metric	
UA	Open silencer UO	

006	Number of vacuum generators	
2	2 pieces	
4	4 pieces	
8	8 pieces	

007	Position function	
SL	Vacant position	
SA	Laval nozzle 0.45 mm, for high vacuum, push-in connector 4 mm	
SB	Laval nozzle 0.7 mm, for high suction rate, push-in connector 6 mm	
SC	Laval nozzle 0.7 mm, for high vacuum, push-in connector 4 mm	
SD	Laval nozzle 0.95 mm, for high suction rate, push-in connector 6 mm	
SE	Laval nozzle 0.95 mm, for high vacuum, push-in connector 6 mm	

008	Sensor signal	
	None	
V	0 ... 10 V	
PNLK	PNP or NPN or IO-Link®	

Datasheet

Vacuum generator OVTL:
- Vacuum generators OVEL
- Common supply manifold OABM-P with 2, 4 or 8 positions
- Mounting kits OABM-MK
- Push-in fittings QS
- Blanking plug B

Temperature range
0 ... +50°C

Operating pressure
2 ... 7 bar

The vacuum generator OVTL is a module comprising vacuum generator OVEL, the common supply manifold OABM-P and connection accessories. All products are available from the factory fully assembled.
The vacuum generator OVTL can be ordered using the modular product system, which is a simpler and quicker alternative to ordering and assembling the various individual products.

Every vacuum generator OVEL has
- a solenoid valve for controlling the ejector pulse
- a flow control screw for regulating the ejector pulse
- an additional supply port for the separate supply of the ejector pulse

Without vacuum sensor
OVEL-...-RQ

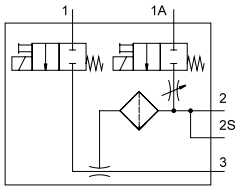

OVEL-...-UA

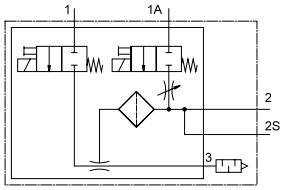

With vacuum sensor
OVEL-...-RQ

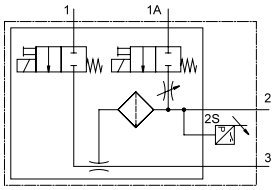

OVEL-...-UA

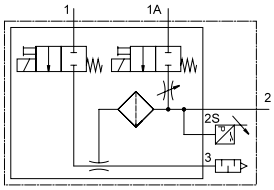

General technical data				
Type			OVTL-10	OVTL-15
Number of device positions			2 ... 8	
Grid dimension		[mm]	10	15
Nominal width of Laval nozzle	OVTL-...-SA	[mm]	0.45	
	OVTL-...-SB/SC	[mm]	–	0.7
	OVTL-...-SD/SE	[mm]	–	0.95
Grade of filtration		[µm]	40	
Mounting position			Any	
Type of mounting			With through-hole	
Pneumatic connection 1 (common supply manifold)	OVTL-...-Q6		For tubing O.D. 6 mm	
	OVTL-...-Q8		For tubing O.D. 8 mm	
	OVTL-...-G18		Female thread G1/8	
Vacuum connection	OVTL-...-SA		For tubing O.D. 4 mm	
	OVTL-...-SC		–	For tubing O.D. 4 mm
	OVTL-...-SB/SD/SE		–	For tubing O.D. 6 mm
Pneumatic connection 3	OVTL-...-UA		Open silencer	
	OVTL-...-RQ-...-SA		For tubing O.D. 4 mm	
	OVTL-...-RQ-...-SB/SC/SD/SE		–	For tubing O.D. 6 mm
Product weight[1)]		[g]	118 ... 890	

1) Total weight calculated by adding the weight of the separate components.

Datasheet

Technical data – design			
Type		OVTL-...-UA	OVTL-...-RQ
Design		Connection position on both sides	
	OVTL-...-L/R	Connection position on the side	
Ejector characteristic	OVTL-...-SA/SC/SE	High vacuum/standard	
	OVTL-...-SB/SD	High suction rate/standard	
Silencer design		Open	–
Integrated function		On/off valve, electric	
		Filter	
		Open silencer	–
		Electrical ejector pulse	
		Flow control valve	
	OVTL-...-V	Pressure transmitter	
	OVTL-...-PNLK	Pressure sensor	
Valve function		Closed	
Manual override		Non-detenting	

Operating and environmental conditions		
Operating pressure	[bar]	2 ... 7
Nominal operating pressure	[MPa]	0.4
	[bar]	4
	[psi]	58
Operating medium		Compressed air to ISO 8573-1:2010 [7:4:4]
Note on the operating/pilot medium		Lubricated operation not possible
LABS (PWIS) conformity		VDMA24364-B1/B2-L
Ambient temperature	[°C]	0 ... +50
Temperature of medium	[°C]	0 ... +50
Corrosion resistance class CRC[1)]		2
CE marking (see declaration of conformity)[2)]		To EU EMC Directive
Certification[2)]		c UL us - Listed (OL)
Degree of protection		IP40

1) Corrosion resistance class CRC 2 to Festo standard FN 940070
Moderate corrosion stress. Indoor applications in which condensation can occur. External visible parts with primarily decorative surface requirements that are in direct contact with a normal industrial environment.

2) For information about the area of use, see the EC declaration of conformity at: www.festo.com/sp ➔ Certificates.
If the devices are subject to usage restrictions in residential, commercial or light-industrial environments, further measures for the reduction of the emitted interference may be necessary.

Performance data		
Max. vacuum	[%]	89 ... 92
Operating pressure for max. vacuum	[bar]	3.8 ... 4.5
Operating pressure for max. suction rate	[bar]	3 ... 6
Max. suction rate with respect to atmosphere	[l/min]	4 ... 45
Pressurisation time at nominal operating pressure 4 bar (for 1 l volume)[1)]	[s]	0.4 ... 2
Sound pressure level at p_1 = 4 bar	[db(A)]	52 ... 68

1) Time required to reduce the vacuum to a residual vacuum of –0.05 bar

Datasheet

Technical data – electrical connection			
Solenoid valve			
Electrical connection input,	Function		Ejector pulse
			Vacuum generation
	Connection type		2x plugs
	Connection technology		Plug pattern H
	Number of pins/wires		2
	Plug pattern		
	Type of mounting		Snap-locking
Operating voltage range		[V DC]	21.6 ... 26.4
Duty cycle		[%]	100
Characteristic coil data, 24 V DC		[W]	1.0
Vacuum sensor			
Electrical connection output,	Function		Sensor
	Connection type		Cable
	Connection technology		Open end
	Number of pins/wires		3
Cable diameter		[mm]	2.9 ±0.1
Cable length		[m]	2.5
Nominal conductor cross section		[mm²]	0.14
Cable characteristic			Suitable for energy chains

Technical data – vacuum sensor			
Type		OVTL-...V	OVTL-...PNLK
Mechanical system			
Measurement method		Piezoresistive pressure sensor	Piezoresistive pressure sensor with display
Pressure measuring range	[MPa]	–0.1 ... 0	
	[bar]	–1 ... 0	
	[psi]	–14.5 ... 0	
Setting options		–	Teach-in
		–	IO-Link®
		–	Via display and keys
Display type		–	LED display, 2-digit
Electrical system			
Operating voltage range, sensor	[V DC]	18 ... 30	
Switching output		–	PNP/NPN switchable
Switching element function		–	N/C or N/O, switchable
Switching function		–	Freely programmable
Analogue output	[V]	0 ... 10	–

Materials	
Sub-base	Wrought aluminium alloy
Hollow bolt	Wrought aluminium alloy
Fitting	Nickel-plated brass
Housing	Reinforced PA
Silencer	PU
Jet nozzle	Wrought aluminium alloy
Female nozzle	POM
Filter	POM
Adjusting screw	Steel
Connecting thread	POM
Screws	Steel
Cable sheath	PVC (colour: grey)
Seals	NBR
Note on materials	RoHS-compliant

Datasheet

Dimensions Download CAD data ➔ www.festo.com

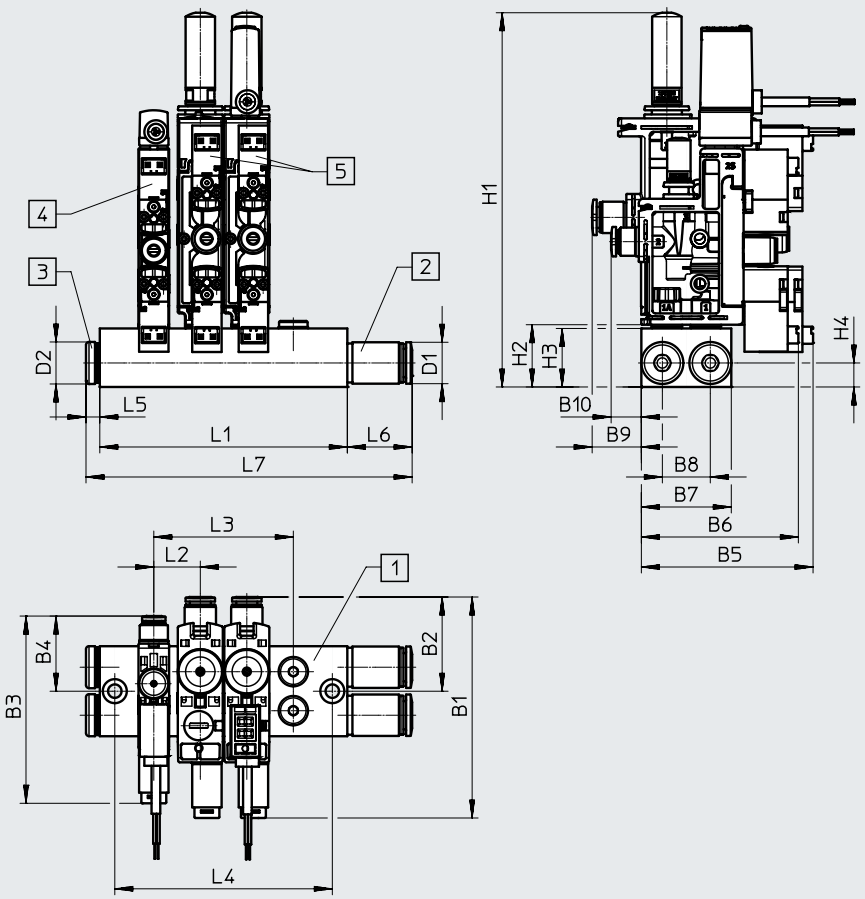

[1] Common supply manifold
[2] Push-in fitting
[3] Blanking plug
[4] Vacuum generator OVEL-5
[5] Vacuum generator OVEL-7/10

Type	B1	B2	B3	B4	B5	B6	B7	B8	B9	B10	D2 ⌀	H1	H2	H3	H4
OVTL	74	31	62	25	57	52	30	16	16	10	14	125	21	19.5	8

Type	L1	L2	L3	L4
OVTL-10-...-2	40.5	10.5	10.5	30.5
OVTL-10-...-4	61.5		31.5	51.5
OVTL-10-...-8	103.5		73.5	93.5
OVTL-15-...-2	51.5	15.5	15.5	41.5
OVTL-15-...-4	82.5		46.5	72.5
OVTL-15-...-8	144.5		108.5	134.5

Type	D1	L5	L6	L7					
				OVTL-10-...-2	OVTL-10-...-4	OVTL-10-...-8	OVTL-15-...-2	OVTL-15-...-4	OVTL-15-...-8
OVTL-...-G18	–	–	–	40.5	61.5	103.5	51.5	82.5	144.5
OVTL-...-G18-L	–	–	5	45.5	66.5	108.5	56.5	87.5	149.5
OVTL-...-G18-R	–	5	–	45.5	66.5	108.5	56.5	87.5	149.5
OVTL-...-Q6	12	17	17	74.5	95.5	137.5	85.5	116.5	178.5
OVTL-...-Q6-L	12	17	5	62.5	83.5	125.5	73.5	104.5	166.5
OVTL-...-Q6-R	12	5	17	62.5	83.5	125.5	73.5	104.5	166.5
OVTL-...-Q8	14	22	22	84.5	105.5	147.5	95.5	126.5	188.5
OVTL-...-Q8-L	14	22	5	67.5	88.5	130.5	78.5	109.5	171.5
OVTL-...-Q8-R	14	5	22	67.5	88.5	130.5	78.5	109.5	171.5

Ordering data – Modular product system

Ordering table					
Type	OVTL	Conditions	Code		Enter code
Module no.	**8103599**				
Vacuum generator	Vacuum generator module, series L		**OVTL**		OVTL
Size	10 mm		**-10**		
	15 mm		**-15**		
Compressed air supply port	Push-in connector 6 mm		**-Q6**		
	Push-in connector 8 mm		**-Q8**		
	G1/8		**-G18**		
Compressed air supply connection position	Both sides				
	Left		**-L**		
	Right		**-R**		
Exhaust port	QS ports, metric		**-RQ**		
	Open silencer UO		**-UA**		
Number of vacuum generators	2 pieces		**-2**		
	4 pieces		**-4**		
	8 pieces		**-8**		
Position function	Spare position		**-SL**		
	Laval nozzle 0.45 mm, for high vacuum, push-in connector 4 mm		**-SA**		
	Laval nozzle 0.7 mm, for high suction rate, push-in connector 6 mm	[1]	**-SB**		
	Laval nozzle 0.7 mm, for high vacuum, push-in connector 4 mm	[1]	**-SC**		
	Laval nozzle 0.95 mm, for high suction rate, push-in connector 6 mm	[1]	**-SD**		
	Laval nozzle 0.95 mm, for high vacuum, push-in connector 6 mm	[1]	**-SE**		
Sensor signal	Without vacuum sensor				
	0 ... 10 V	[2]	**V**		
	PNP or NPN or IO-Link	[2]	**PNLK**		

[1] SB, SC, SD, SE Not with size 10.
[2] V, PNLK Not with position function SL.

Note

The position function and sensor signal must be selected for every vacuum generator in accordance with the number of vacuum generators configured.

Example with 4:
- OVTL-10-Q8R-UA-4-SAVSESEPNLK-SL

Accessories

Common supply manifold OABM-P
For vacuum generator
OVEL-...-P

- Up to 8 vacuum generators OVEL on a common supply manifold
- Common compressed air supply via common supply manifold

Note

On the common supply manifold vacuum generators with an additional port for the ejector pulse (OVEL-...-Z-C-A) cannot be combined with vacuum generators without an additional port (OVEL-...-C-A).

General technical data		
Pneumatic connection 1		G1/8
Type of mounting		With through-hole
Min. tightening torque	[Nm]	0.3
Max. tightening torque	[Nm]	3.3

Operating and environmental conditions	
LABS (PWIS) conformity	VDMA24364-B1/B2-L
Corrosion resistance class CRC[1)]	2 - Moderate corrosion stress

1) Corrosion resistance class CRC 2 to Festo standard FN 940070
Moderate corrosion stress. Indoor applications in which condensation can occur. External visible parts with primarily decorative surface requirements that are in direct contact with a normal industrial environment.

Materials	
Sub-base	Wrought aluminium alloy
Note on materials	RoHS-compliant

Dimensions Download CAD data ➔ www.festo.com

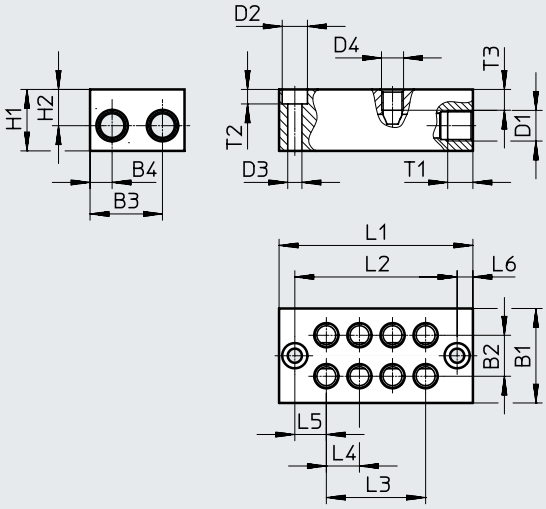

Type	B1	B2	B3	B4	D1	D2 ⌀	D3 ⌀	D4	H1	H2	L1	L2	L3	L4	L5	L6	T1	T2	T3
OABM-P-G3-10-2	30	13	23	7	G1/8	8	4.5	M7	19.5	11.5	40.5	30.5	10.5	10.5	10	5	8	4.6	6.6
OABM-P-G3-10-4											61.5	51.5	31.5						
OABM-P-G3-10-8											103.5	93.5	73.5						
OABM-P-G3-15-2	30	13	23	7	G1/8	8	4.5	M7	19.5	11.5	51.5	41.5	15.5	15.5	13	5	8	4.6	6.6
OABM-P-G3-15-4											82.5	72.5	46.5						
OABM-P-G3-15-8											144.5	134.5	108.5						

Accessories

Dimensions Download CAD data ➔ www.festo.com

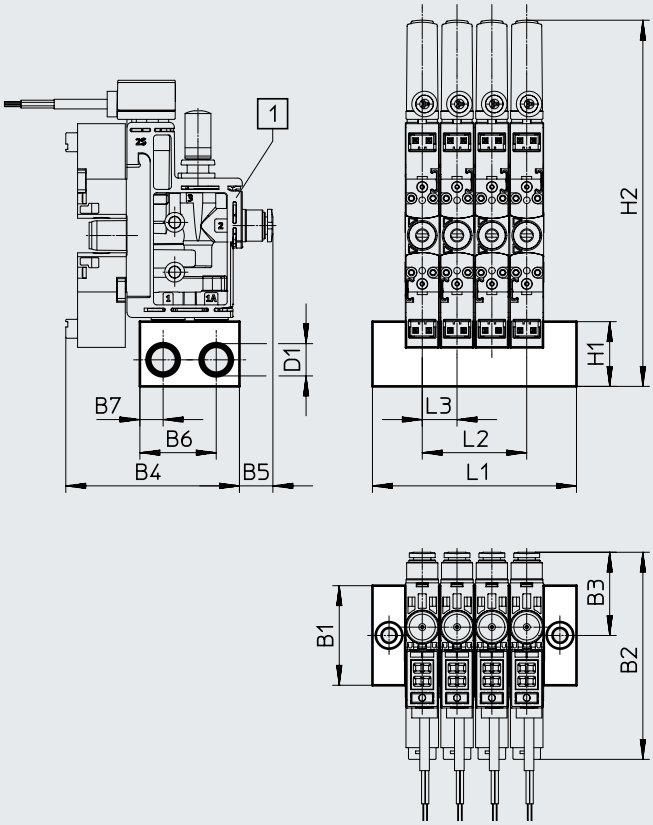

[1] Vacuum generator OVEL-5/7/10

Note

Combined allocation with OVEL-5 and OVEL-7/-10 is possible only with common supply manifolds OABM-...-15.

Use mounting kit OABM-MK for mounting the OVEL on the common supply manifold.
Min. tightening torque: 0.3 Nm
Max. tightening torque: 3.3 Nm

Type		B1	B2	B3	B4	B5	B6	B7	D1	H1	H2	L1	L2	L3
OABM-P-G3-10-2	with OVEL-5	30	62	25	52	10	23	7	G1/8	19.5	110	40.5	10.5	10.5
OABM-P-G3-10-4												61.5	31.5	
OABM-P-G3-10-8												103.5	73.5	
OABM-P-G3-15-2	with OVEL-7/10	30	74	31	57	16	23	7	G1/8	19.5	125	51.5	15.5	15.5
OABM-P-G3-15-4												82.5	46.5	
OABM-P-G3-15-8												144.5	108.5	

Ordering data

Common supply manifold	Number of device positions	Weight [g]	Part no.	Type
For OVEL-5	2	45.2	**8049141**	**OABM-P-G3-10-2**
	4	69.6	**8049142**	**OABM-P-G3-10-4**
	8	118.6	**8049143**	**OABM-P-G3-10-8**
For OVEL-5/7/10	2	59.6	**8049144**	**OABM-P-G3-15-2**
	4	97.1	**8049145**	**OABM-P-G3-15-4**
	8	172	**8049146**	**OABM-P-G3-15-8**

Accessories

Vacuum filter OAFF

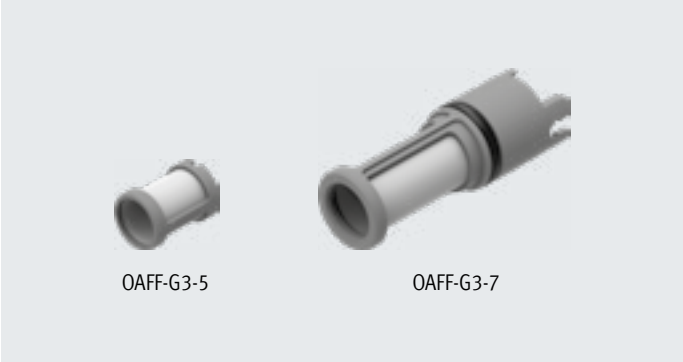

General technical data		
Type of mounting		Push-on
		Snap-in
Grade of filtration	[µm]	40
Ejector pulse suitability	[bar]	≤7

Operating and environmental conditions		
Operating pressure	[kPa]	–95 ... 0
	[bar]	–0.95 ... 0
	[psi]	–13.775 ... 0
Operating medium		Atmospheric air based on ISO 8573-1:2010 [7:–:–]
LABS (PWIS) conformity		VDMA24364-B1/B2-L
Ejector pulse suitability	[MPa]	0.7
	[bar]	7
	[psi]	101.5

Materials		
Type	OAFF-G3-5	OAFF-G3-7
Housing	POM	
Filter	Fabric, PA	
Seals	–	NBR
Note on materials	RoHS-compliant	

Ordering data	Weight [g]	Part no.	Type	PU[1]
For vacuum generator OVEL-5	1	**8068944**	**OAFF-G3-5**	**10**
For vacuum generator OVEL-7/10	1.5	**8068945**	**OAFF-G3-7**	**10**

1) Packaging unit

Accessories

Ordering data – Plug NECU-S-M8G3/M12G3

Datasheets → Internet: necu

	Electrical connection	Part no.	Type
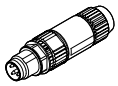	Plug M8x1, 3-pin, straight, insulation displacement connector	**562024**	**NECU-S-M8G3-HX**
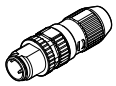	Plug M12x1, A-coded, 3-pin, straight, insulation displacement connector	**562027**	**NECU-S-M12G3-HX**

Ordering data – Plug NECU-S-ECG4

Datasheets → Internet: necu

	Electrical connection	Part no.	Type
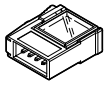	Plug, square design, 4-pin, straight, insulation displacement connector	**570922**	**NECU-S-ECG4-HX-Q3**

Ordering data – Signal converter SCDN

Datasheets → Internet: scdn

	Measured variable	Part no.	Type
	Voltage	**8035555**	**SCDN-2V-EC4-PNLK-L1**

Ordering data – Plug socket with cable NEBV

Datasheets → Internet: nebv

	Electrical connection		Cable length [m]	Part no.	Type
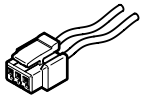	2-pin socket Plug pattern H	Flying leads Open end	0.5	**566654**	**NEBV-H1G2-KN-0.5-N-LE2**
			1	**566655**	**NEBV-H1G2-KN-1-N-LE2**
			2.5	**566656**	**NEBV-H1G2-KN-2.5-N-LE2**
			5	**566657**	**NEBV-H1G2-KN-5-N-LE2**
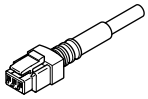	2-pin socket Plug pattern H	Cable Open end	0.5	**566658**	**NEBV-H1G2-P-0.5-N-LE2**
			1	**566659**	**NEBV-H1G2-P-1-N-LE2**
			2.5	**566660**	**NEBV-H1G2-P-2.5-N-LE2**
			5	**566661**	**NEBV-H1G2-P-5-N-LE2**

Ordering data – Blanking plug B

	Pneumatic connection	Part no.	Type	PU[1)]
	M7	**174309**	**B-M7**	**10**
	G1/8	**3568**	**B-1/8**	**10**

1) Packaging unit.

Ordering data – Push-in fitting QS

	Pneumatic connection		Part no.	Type	PU[1)]
	G1/8	Tubing O.D. 8 mm	**186098**	**QS-G1/8-8**	**10**
	G1/8	Tubing O.D. 8 mm	**186109**	**QS-G1/8-8-I**	**10**

1) Packaging unit.